ANSI FLANGES

- Class 150 Flanges
- Class 300 Flanges
- Class 400 Flanges
- Class 600 Flanges
- Class 900 Flanges
- Class 1500 Flanges
- Class 2500 Flanges

CLASS 150–300 FLANGES

JIP 7S-15-84 & ANSI 16.5

SLIP-ON • SOCKET-WELDING

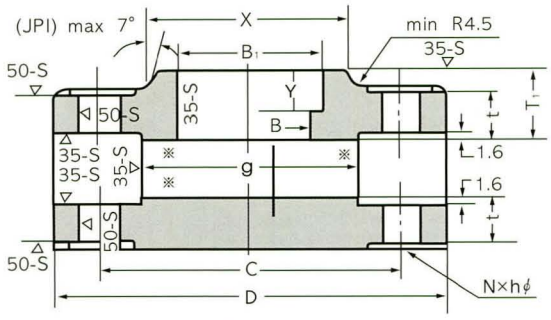

WELDING-NECK

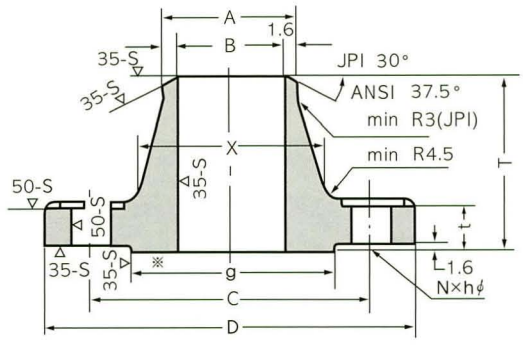

BLIND

Class 150

UNIT : mm

Nominal Pipe Size		Outside Dia. of Flanges	Dia of Bore										Dia. of Hub at Bevel A		Dia. of Hub at Base	Dia. of Raised Face	Thick of Flanges	Radius of Fillet
			Slip-on Socket, B_1		Lap-Joint B_2		Welding-Neck, Socket B											
							JPI			ANSI								
A	B	D	JPI	ANSI	JPI	ANSI	SCH40	SCH80	SCH160	SCH40	SCH80	SCH160	JPI	ANSI	X	g	t	r_2
15	1/2	89	22.2	22.4	23.4	22.9	16.1	14.3	12.3	15.8	13.9	11.8	21.7	21.3	30.2	35.1	11.2	3
20	3/4	98	27.7	27.7	28.9	28.2	21.4	19.4	16.2	20.9	18.8	15.6	27.2	26.7	38.1	42.9	12.7	3
25	1	108	34.5	34.6	35.6	35.1	27.2	25.0	21.2	26.6	24.3	20.7	34.0	33.5	49.3	50.8	14.3	3
(32)	(1 1/4)	117	43.2	43.2	44.3	43.7	35.5	32.9	29.9	35.1	32.5	29.5	42.7	42.2	58.7	63.5	15.9	5
40	1 1/2	127	49.1	49.6	50.4	50.0	41.2	38.4	34.4	40.9	38.1	34.0	48.6	48.3	65.0	73.2	17.5	6
50	2	152	61.1	62.0	62.7	62.5	52.7	49.5	43.1	52.5	49.3	42.9	60.5	60.5	77.8	91.9	19.1	8
65	2 1/2	178	77.1	74.7	78.7	75.5	65.9	62.3	57.3	62.7	59.0	54.0	76.3	73.2	90.4	104.6	22.3	8
80	3	191	90.0	90.7	91.6	91.4	78.1	73.9	66.9	77.9	73.7	66.7	89.1	88.9	108.0	127.0	23.9	10
(90)	(3 1/2)	216	102.6	103.4	104.1	104.2	90.2	85.4	76.2	90.1	85.5	-	101.6	101.6	122.2	139.7	23.9	10
100	4	229	115.4	116.1	116.9	116.9	102.3	97.1	87.3	102.3	97.2	87.3	114.3	114.3	134.9	157.2	23.9	11
(125)	(5)	254	141.2	143.8	143.0	144.6	126.6	120.8	108.0	128.2	122.3	109.6	139.8	141.2	163.6	185.7	23.9	11
150	6	279	166.6	170.7	168.4	171.5	151.0	143.2	128.8	154.1	146.3	131.8	165.2	168.4	192.1	215.9	25.4	13
200	8	343	218.0	221.5	219.5	222.3	199.9	190.9	170.3	202.7	193.7	173.1	216.3	219.2	246.1	269.7	28.6	13
250	10	406	269.5	276.4	271.7	277.4	248.8	237.2	210.2	254.4	242.9	215.9	267.4	273.1	304.8	323.9	30.2	13
300	12	483	321.0	327.2	322.8	328.2	297.9	283.7	251.9	303.2	288.9	257.2	318.5	323.9	365.1	381.0	31.8	13
350	14	533	358.1	358.1	-	360.2	333.4	317.6	284.2	333.3	317.5	284.2	355.6	355.6	400.1	412.8	35.0	13
400	16	597	409.0	409.0	-	411.3	381.0	363.6	325.4	381.0	363.6	325.5	406.4	406.4	457.2	469.9	36.6	13
450	18	635	460.0	460.0	-	462.4	428.6	409.6	366.8	428.7	409.6	366.7	457.2	457.2	504.8	533.4	39.7	13
500	20	699	511.0	511.0	-	514.4	477.8	455.6	408.0	477.8	455.6	408.0	508.0	508.0	558.8	584.2	42.9	13
600	24	815	613.0	613.0	-	616.0	574.6	547.8	490.6	574.7	547.7	490.6	609.6	609.6	663.6	692.2	47.7	13

Class 300

UNIT : mm

Nominal Pipe Size		Outside Dia. of Flanges	Dia of Bore										Dia. of Hub at Bevel A		Dia. of Hub at Base	Dia. of Raised Face	Thick of Flanges	Radius of Fillet
			Slip-on Socket, B_1		Lap-Joint B_2		Welding-Neck, Socket B											
							JPI			ANSI								
A	B	D	JPI	ANSI	JPI	ANSI	SCH40	SCH80	SCH160	SCH40	SCH80	SCH160	JPI	ANSI	X	g	t	r_2
15	1/2	95	22.2	22.4	23.4	22.9	16.1	14.3	12.3	15.8	13.9	11.8	21.7	21.3	38.1	35.1	14.3	3
20	3/4	117	27.7	27.7	28.9	28.2	21.4	19.4	16.2	20.9	18.8	15.6	27.2	26.7	47.6	42.9	15.9	3
25	1	124	34.5	34.6	35.6	35.1	27.2	25.0	21.2	26.6	24.3	20.7	34.0	33.5	54.0	50.8	17.5	3
(32)	(1 1/4)	133	43.2	43.2	44.3	43.7	35.5	32.9	29.9	35.1	32.5	29.5	42.7	42.2	63.5	63.5	19.1	5
40	1 1/2	156	49.1	49.6	50.4	50.0	41.2	38.4	34.4	40.9	38.1	34.0	48.6	48.3	69.9	73.2	20.6	6
50	2	165	61.1	62.0	62.7	62.5	52.7	49.5	43.1	52.5	49.3	42.9	60.5	60.5	84.1	91.9	22.4	8
65	2 1/2	191	77.1	74.7	78.7	75.5	65.9	62.3	57.3	62.7	59.0	54.0	76.3	73.2	100.0	104.6	25.4	8
80	3	210	90.0	90.7	91.6	91.4	78.1	73.9	66.9	77.9	73.7	66.7	89.1	88.9	117.5	127.0	28.6	10
(90)	(3 1/2)	229	102.6	103.4	104.1	104.2	90.2	85.4	76.2	90.1	85.5	-	101.6	101.6	133.4	139.7	30.2	10
100	4	254	115.4	116.1	116.9	116.9	102.3	97.1	87.3	102.3	97.2	87.3	114.3	114.3	146.1	157.2	31.8	11
(125)	(5)	279	141.2	143.8	143.0	144.6	126.6	120.8	108.0	128.2	122.3	109.6	139.8	141.2	177.8	185.7	35.1	11
150	6	318	166.6	170.7	168.4	171.5	151.0	143.2	128.8	154.1	146.3	131.8	165.2	168.4	206.4	215.9	36.6	13
200	8	381	218.0	221.5	219.5	222.3	199.9	190.9	170.3	202.7	193.7	173.1	216.3	219.2	260.4	269.7	41.3	13
250	10	445	269.5	276.4	271.7	277.4	248.8	237.2	210.2	254.4	242.9	215.9	267.4	273.1	320.7	323.9	47.8	13
300	12	521	321.0	327.2	322.8	328.2	297.9	283.7	251.9	303.2	288.9	257.2	318.5	323.9	374.7	381.0	50.8	13
350	14	584	358.1	358.1	-	360.2	333.4	317.6	284.2	333.3	317.5	284.2	355.6	355.6	425.5	412.8	54.0	13
400	16	650	409.0	409.0	-	411.3	381.0	363.6	325.4	381.0	363.6	325.5	406.4	406.4	482.6	469.9	57.2	13
450	18	710	460.0	460.0	-	462.4	428.6	409.6	366.8	428.7	409.6	366.7	457.2	457.2	533.4	533.4	60.4	13
500	20	775	511.0	511.0	-	514.4	477.8	455.6	408.0	477.8	455.6	408.0	508.0	508.0	587.4	584.2	63.5	13
600	24	914	613.0	613.0	-	616.0	574.6	547.8	490.6	574.7	547.7	490.6	609.6	609.6	701.7	692.2	69.9	13

THREADED

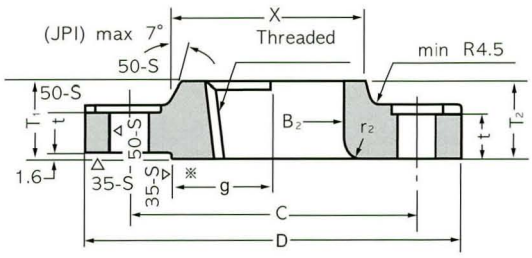

LAP-JOINT

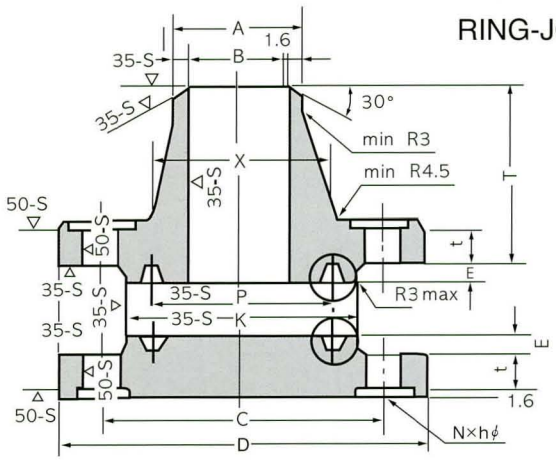

RING-JOINT

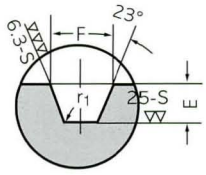

Class 150

UNIT : mm

Length thru Hub			Depth of Socket	Drilling			Dia. of Raised Face for Ring Joint	Pitch Dia. of Ring & Groove	Ring No.	RTJ Type			Approx. Weight(kg)				Nominal Pipe Size	
Slip-on Socket Thread	Lap Joint	Welding Neck		Dia. of Bolt Circle	Number of Bolt	Dia. of Bolt Hole				Depth of Groove	Width of Groove	Radius of Groove	W.N	S.O	S.W	B.L		
T_1	T_2	T	Y	C	N	h	K(min)	P		E	F	r_1					A	B
15.9	15.9	47.6	9.5	60.5	4	16	-	-	-	-	-	-	0.50	0.41	0.42	0.43	15	1/2
15.9	15.9	52.4	11.1	70.0	4	16	-	-	-	-	-	-	0.75	0.57	0.58	0.62	20	3/4
17.5	17.5	55.6	12.7	79.5	4	16	63.5	47.62	R15	6.35	8.74	0.8	1.02	0.78	0.80	0.87	25	1
20.6	20.6	57.1	14.3	89.0	4	16	73.0	57.15	R17	6.35	8.74	0.8	1.33	1.03	1.06	1.16	(32)	(1 1/4)
22.2	22.2	61.9	15.9	98.5	4	16	82.5	69.07	R19	6.35	8.74	0.8	1.72	1.32	1.35	1.54	40	1 1/2
25.4	25.4	63.5	17.5	120.5	4	19	102	82.55	R22	6.35	8.74	0.8	2.59	2.09	2.13	2.46	50	2
28.6	28.6	69.8	19.0	139.5	4	19	121	101.60	R25	6.35	8.74	0.8	4.06	3.25	3.35	3.99	65	2 1/2
30.2	30.2	69.8	20.6	152.5	4	19	133	114.30	R29	6.35	8.74	0.8	4.95	3.91	4.02	4.98	80	3
31.8	31.8	71.4	22.2	178.0	8	19	154	131.78	R33	6.35	8.74	0.8	6.08	4.86	4.99	6.20	(90)	(3 1/2)
33.3	33.3	76.2	23.8	190.5	8	19	171	149.22	R36	6.35	8.74	0.8	6.91	5.35	5.99	7.05	100	4
36.5	36.5	88.9	23.8	216.0	8	22	194	171.45	R40	6.35	8.74	0.8	8.75	6.22	6.68	8.67	(125)	(5)
39.7	39.7	88.9	27.0	241.5	8	22	219	193.68	R43	6.35	8.74	0.8	10.8	7.76	7.99	11.3	150	6
44.5	44.5	101.6	31.8	298.5	8	22	273	247.65	R48	6.35	8.74	0.8	18.0	12.6	13.29	19.9	200	8
49.2	49.2	101.6	33.3	362.0	12	25	330	304.80	R52	6.35	8.74	0.8	24.9	17.6	19.50	29.0	250	10
55.6	55.6	114.3	39.7	432.0	12	25	406	381.00	R56	6.35	8.74	0.8	38.6	27.8	29.03	43.7	300	12
57.2	*79.3	127.0	41.3	476.0	12	29	425	396.88	R59	6.35	8.74	0.8	50.6	35.2	38.56	58.6	350	14
63.5	*87.4	127.0	44.5	539.5	16	29	483	454.02	R64	6.35	8.74	0.8	63.9	45.3	44.49	76.6	400	16
68.3	*96.8	139.7	49.2	578.0	16	32	546	517.52	R68	6.35	8.74	0.8	74.9	49.7	54.43	94.5	450	18
73.0	*103.1	144.5	54.0	635.0	20	32	597	558.80	R72	6.35	8.74	0.8	93.5	63.5	70.31	123	500	20
82.6	*111.3	152.4	63.5	749.5	20	35	711	673.10	R76	6.35	8.74	0.8	133	90.5	95.25	188	600	24

Class 300

UNIT : mm

Length thru Hub			Depth of Socket	Drilling			Dia. of Raised Face for Ring Joint	Pitch Dia. of Ring & Groove	Ring No.	RTJ Type			Approx. Weight(kg)				Nominal Pipe Size	
Slip-on Socket Thread	Lap Joint	Welding Neck		Dia. of Bolt Circle	Number of Bolt	Dia. of Bolt Hole				Depth of Groove	Width of Groove	Radius of Groove	W.N	S.O	S.W	B.L		
T_1	T_2	T	Y	C	N	h	K(min)	P		E	F	r_1					A	B
22.2	22.2	52.4	9.7	66.5	4	16	51.0	34.14	R11	5.56	7.14	0.8	0.80	0.65	0.67	0.65	15	1/2
25.4	25.4	57.2	11.2	82.6	4	19	63.5	42.88	R13	6.35	8.74	0.8	1.25	1.10	1.12	1.09	20	3/4
27.0	27.0	61.9	12.7	88.9	4	19	70.0	50.80	R16	6.35	8.74	0.8	1.58	1.35	1.39	1.38	25	1
27.0	27.0	65.1	14.2	98.6	4	19	79.5	60.32	R18	6.35	8.74	0.8	2.05	1.69	1.74	1.82	(32)	(1 1/4)
30.2	30.2	68.3	15.8	114.3	4	22	90.5	68.28	R20	6.35	8.74	0.8	2.93	2.54	2.60	2.70	40	1 1/2
33.3	33.3	69.8	17.5	127.0	8	19	108	82.55	R23	7.92	11.91	0.8	3.40	2.92	3.02	3.18	50	2
38.1	38.1	76.2	19.1	149.4	8	22	127	101.60	R26	7.92	11.91	0.8	5.10	4.24	4.43	4.86	65	2 1/2
42.9	43.9	79.4	20.6	168.1	8	22	146	123.82	R31	7.92	11.91	0.8	7.01	5.94	6.21	6.90	80	3
44.5	44.5	81.0	22.4	184.2	8	22	159	131.78	R34	7.92	11.91	0.8	8.71	7.90	-	8.79	(90)	(3 1/2)
47.6	47.6	85.7	23.9	200.2	8	22	175	149.22	R37	7.92	11.91	0.8	11.3	9.71	-	11.6	100	4
50.8	50.8	98.4	23.9	235.0	8	22	210	180.98	R41	7.92	11.91	0.8	15.1	12.4	-	15.5	(125)	(5)
52.4	52.4	98.4	26.9	269.7	12	22	241	211.12	R45	7.92	11.91	0.8	19.6	16.2	-	21.2	150	6
61.9	61.9	111.1	31.8	330.2	12	26	302	269.88	R49	7.92	11.91	0.8	30.3	24.8	-	34.5	200	8
66.7	95.3	117.5	33.3	387.3	16	29	356	323.85	R53	7.92	11.91	0.8	44.3	35.9	-	53.9	250	10
73.0	101.6	130.2	39.6	450.9	16	32	413	381.004	R57	7.92	11.91	0.8	64.1	51	-	78.9	300	12
76.2	*111.3	142.9	41.4	514.4	20	32	457	419.10	R61	7.92	11.91	0.8	88.3	70.1	-	106	350	14
82.6	*120.7	146.0	44.5	571.5	20	35	508	469.90	R65	7.92	11.91	0.8	113	90.4	-	139	400	16
89.9	*130.0	158.8	49.3	628.7	24	35	575	533.40	R69	7.92	11.91	0.8	138	109	-	175	450	18
95.2	*139.7	161.9	54.1	735.8	24	35	635	584.20	R73	9.52	13.49	1.5	169	136	-	222	500	20
106.4	*152.4	168.3	63.5	812.8	24	42	749	692.15	R77	11.13	16.66	1.5	248	204	-	340	600	24

CLASS 400–600 FLANGES

JIP 7S-15-84 ANSI B 16.5

WELDING-NECK

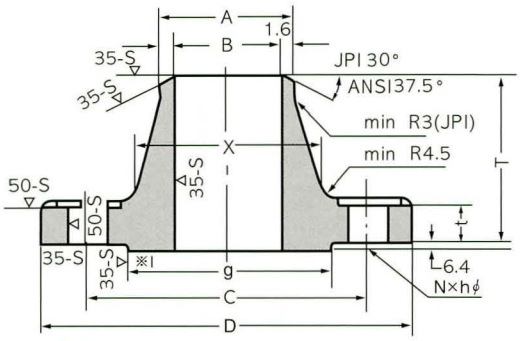

SLIP-ON

SOCKET-WELDING

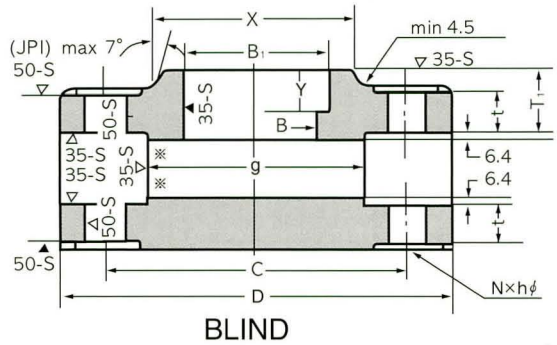

BLIND

Class 400

UNIT : mm

Nominal Pipe Size		Outside Dia. of Flanges	Dia of Bore										Dia. of Hub at Bevel A		Dia. of Hub at Base	Dia. of Raised Face	Thick of Flanges	Radius of Fillet
			Slip-on Socket, B_1		Lap-Joint B_2		Welding-Neck, Socket B											
							JPI			ANSI								
A	B	D	JPI	ANSI	JPI	ANSI	SCH40	SCH80	SCH160	SCH40	SCH80	SCH160	JPI	ANSI	X	g	t	r_2
15	1/2	95	22.2	22.4	23.4	22.9	16.1	14.3	12.3	15.8	13.9	11.8	21.7	21.3	38.1	34.9	14.3	3
20	3/4	117	27.8	27.7	28.9	28.2	21.4	19.4	16.2	20.9	18.8	15.6	27.2	26.7	47.8	42.9	15.9	3
25	1	124	34.5	34.6	35.6	35.1	27.2	25.0	21.2	26.6	24.3	20.7	34.0	33.5	53.8	50.8	17.5	3
(32)	(1 1/4)	133	43.2	43.2	44.3	43.7	35.5	32.9	29.9	35.1	32.5	29.5	42.7	42.2	63.5	63.5	20.7	5
40	1 1/2	155	49.1	49.6	50.4	50.0	41.2	38.4	34.4	40.9	38.1	34.0	48.6	48.3	69.9	73.0	22.3	6
50	2	165	61.1	62.0	62.7	62.5	52.7	49.5	43.1	52.5	49.3	42.9	60.5	60.5	84.1	92.1	25.4	8
65	2 1/2	191	77.1	74.7	78.7	75.5	65.9	62.3	57.3	62.7	59.0	54.0	76.3	73.2	100.1	104.8	28.6	8
80	3	210	90.0	90.7	91.6	91.4	78.1	73.9	66.9	77.9	73.7	66.7	89.1	88.9	117.3	127.0	31.8	10
(90)	(3 1/2)	229	102.6	103.4	104.1	104.2	90.2	85.4	76.2	90.1	85.5	-	101.6	101.6	133.4	139.7	35.0	10
100	4	254	115.4	116.1	116.9	116.9	102.3	97.1	87.3	102.3	97.2	87.3	114.3	114.3	146.1	157.2	35.0	11
(125)	(5)	279	141.2	143.8	143.0	144.6	126.6	120.8	108.0	128.2	122.3	109.6	139.8	141.2	177.8	185.7	38.1	11
150	6	318	166.6	170.7	168.4	171.5	151.0	143.2	128.8	154.1	146.3	131.8	165.2	168.4	206.2	215.9	41.1	13
200	8	381	218.0	221.5	219.5	222.3	199.9	190.9	170.3	202.7	193.7	173.1	216.3	219.2	260.3	269.9	47.7	13
250	10	445	269.5	276.4	271.7	277.4	248.8	237.2	210.2	154.5	242.9	215.9	267.4	273.1	320.5	323.8	54.0	13
300	12	521	321.0	327.2	322.8	328.2	297.9	283.7	251.9	303.2	288.9	257.2	318.5	323.9	374.7	381.0	57.2	13
350	14	584	358.1	358.1	-	360.2	333.4	317.6	284.2	333.3	317.5	284.2	355.6	355.6	425.5	412.8	60.4	13
400	16	648	409.0	409.0	-	411.3	381.0	363.3	325.4	381.0	363.6	325.5	406.4	406.4	482.6	469.9	63.5	13
450	18	710	460.0	460.0	-	462.4	428.6	409.6	366.8	428.7	409.6	366.7	457.2	457.2	533.4	533.4	66.7	13
500	20	775	511.0	511.0	-	514.4	477.8	455.6	408.0	477.8	455.6	408.0	508.0	508.0	587.4	584.2	69.9	13
600	24	914	613.0	613.0	-	616.0	574.6	547.8	490.6	574.7	547.7	490.6	609.6	609.6	701.5	692.2	76.2	13

Class 600

UNIT : mm

Nominal Pipe Size		Outside Dia. of Flanges	Dia of Bore										Dia. of Hub at Bevel A		Dia. of Hub at Base	Dia. of Raised Face	Thick of Flanges	Radius of Fillet
			Slip-on Socket, B_1		Lap-Joint B_2		Welding-Neck, Socket B											
							JPI			ANSI								
A	B	D	JPI	ANSI	JPI	ANSI	SCH40	SCH80	SCH160	SCH40	SCH80	SCH160	JPI	ANSI	X	g	t	r_2
15	1/2	95	22.2	22.4	-	22.9	16.1	14.3	12.3	15.8	13.9	11.8	21.7	21.3	38.1	34.9	14.3	3
20	3/4	117	27.7	27.7	-	28.2	21.4	19.4	16.2	20.9	18.8	15.6	27.2	26.7	47.8	42.9	15.9	3
25	1	124	34.5	34.6	-	35.1	27.2	25.0	21.2	26.6	24.3	20.7	34.0	33.5	53.8	50.8	17.5	3
(32)	(1 1/4)	133	43.2	43.2	-	43.7	35.5	32.9	29.9	35.1	32.5	29.5	42.7	42.2	63.5	63.5	20.7	5
40	1 1/2	155	49.1	49.6	-	50.0	41.2	38.4	34.4	40.9	38.1	34.0	48.6	48.3	69.9	73.0	22.3	6
50	2	165	61.1	62.0	-	62.5	52.7	49.5	43.1	52.5	49.3	42.9	60.5	60.5	84.1	92.1	25.4	8
65	2 1/2	191	77.1	74.7	-	75.5	65.9	62.3	57.3	62.7	59.0	54.0	76.3	73.2	100.1	104.8	28.6	8
80	3	210	90.0	90.7	-	91.4	78.1	73.9	66.9	77.9	73.7	66.7	89.1	88.9	117.3	127.0	31.8	10
(90)	(3 1/2)	229	102.6	103.4	-	104.2	90.2	85.4	76.2	90.1	85.5	-	101.6	101.6	133.4	139.7	35.0	10
100	4	273	115.4	116.1	-	116.9	102.3	97.1	87.3	102.3	97.2	87.3	114.3	114.3	152.4	157.2	38.1	11
(125)	(5)	330	141.2	143.8	-	144.6	126.6	120.8	108.0	128.2	122.3	109.6	139.8	141.2	189.0	185.7	44.5	11
150	6	356	166.6	170.7	-	171.5	151.0	143.2	128.8	154.1	146.3	131.8	165.2	168.4	222.3	215.9	47.7	13
200	8	419	218.0	221.5	-	222.3	199.9	190.9	170.3	202.7	193.7	173.1	216.3	219.2	273.1	269.9	55.6	13
250	10	508	269.5	276.4	-	277.4	248.8	237.2	210.2	254.4	242.9	215.9	267.4	273.1	342.9	323.8	63.5	13
300	12	559	321.0	327.2	-	328.2	297.9	283.7	251.9	303.2	288.9	257.2	318.5	323.9	400.1	381.0	66.7	13
350	14	603	358.1	358.1	-	360.2	333.4	317.6	284.2	333.3	317.5	284.2	355.6	355.6	431.8	412.8	69.9	13
400	16	686	409.0	409.0	-	411.3	381.0	363.6	325.4	381.0	363.6	325.5	406.4	406.4	495.3	469.9	76.2	13
450	18	743	460.0	460.0	-	462.4	428.6	409.6	366.8	428.7	409.6	366.7	457.2	457.2	546.1	533.4	82.6	13
500	20	813	511.0	511.0	-	514.4	477.8	455.6	408.0	477.8	455.6	408.0	508.0	508.0	609.6	584.2	88.9	13
600	24	940	613.0	613.0	-	616.0	574.6	547.8	490.6	574.7	547.7	490.6	609.6	609.6	717.6	692.2	101.6	13

THREADED

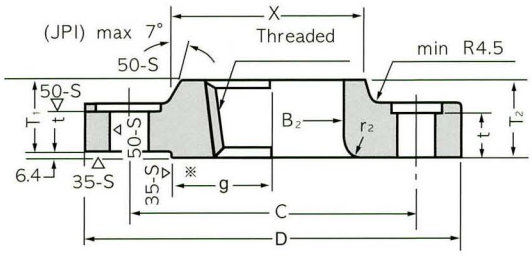

LAP-JOINT

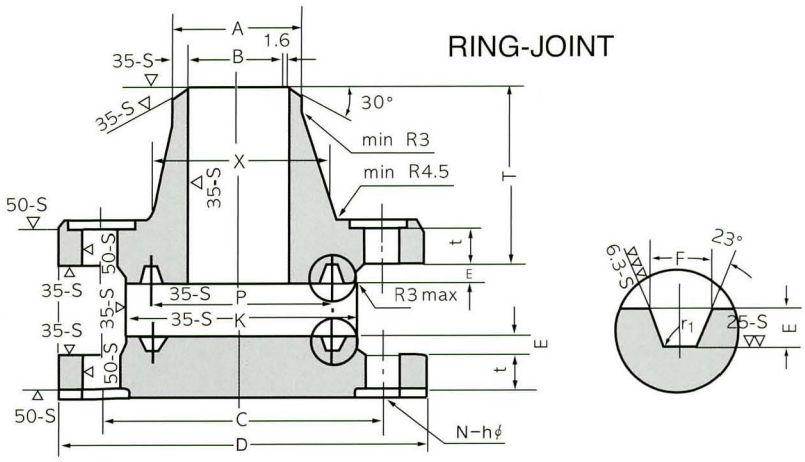

RING-JOINT

Class 400

UNIT : mm

Length Thru Hub			Depth of Socket	Drilling			Dia. of Raised Face for Ring Joint	Pitch Dia. of Ring & Groove	Ring No.	RTJ Type			Approx. Weight(kg)				Nominal Pipe Size	
Slip-on Socket Thread	Lap Joint	Welding Neck		Dia. of Bolt Circle	Number of Bolt	Dia. of Bolt Hole				Depth of Groove	Width of Groove	Radius of Groove	W.N	S.O	S.W	B.L		
T_1	T_2	T	Y	C	N	h	K(min)	P		E	F	r_1					A	B
22.4	22	52.3	9.5	66.5	4	16	51.0	34.14	R11	5.56	7.14	0.8	0.86	0.74	0.77	0.76	15	1/2
25.4	25	57.2	11.1	82.6	4	19	63.5	42.88	R13	6.35	8.74	0.8	1.40	1.24	1.28	1.27	20	3/4
26.9	27	62.0	12.7	88.9	4	19	70.0	50.80	R16	6.35	8.74	0.8	1.76	1.51	1.57	1.59	25	1
28.4	29	66.5	14.3	98.6	4	19	79.5	60.32	R18	6.35	8.74	0.8	2.41	2.03	2.11	2.24	(32)	(1 1/4)
31.8	32	69.9	15.9	114.3	4	22	90.5	68.28	R20	6.35	8.74	0.8	3.44	3.01	3.11	3.30	40	(1 1/2)
36.6	37	73.2	17.5	127.0	8	19	108	82.55	R23	7.92	11.91	0.8	4.18	3.62	3.77	4.11	50	2
41.1	41	79.2	19.0	149.4	8	22	127	101.60	R26	7.92	11.91	0.8	6.11	5.20	5.58	6.20	65	2 1/2
46.0	46	82.6	20.6	168.1	8	22	146	123.82	R31	7.92	11.91	0.8	8.27	7.08	7.47	8.51	80	3
49.3	49	85.9	22.2	184.2	8	25	159	131.78	R34	7.92	11.91	0.8	10.3	8.86	-	10.9	(90)	(3 1/2)
50.8	51	88.9	23.8	200.2	8	25	175	149.22	R37	7.92	11.91	0.8	12.9	11.1	-	13.7	100	4
53.8	54	101.6	23.8	235.0	8	25	210	180.98	R41	7.92	11.91	0.8	17.1	14.2	-	18.6	(125)	(5)
57.2	57	103.1	27.0	269.7	12	25	241	211.12	R45	7.92	11.91	0.8	22.6	18.9	-	25.7	150	6
68.3	68	117.3	31.8	330.2	12	29	302	269.88	R49	7.92	11.91	0.8	35.5	29.4	-	42.9	200	8
73.2	101.6	124.0	33.3	387.4	16	32	356	323.85	R53	7.92	11.91	0.8	50.4	41.1	-	64.6	250	10
79.2	108.0	136.7	39.7	450.9	16	35	413	381.00	R57	7.92	11.91	0.8	73.8	59.2	-	95.7	300	12
84.1	117.3	149.4	44.3	514.4	20	35	457	419.10	R61	7.92	11.91	0.8	99.0	80.0	-	125	350	14
93.7	127	152.4	44.5	571.5	20	39	508	469.90	R65	7.92	11.91	0.8	125	103	-	162	400	16
98	136.7	165.1	49.2	628.7	24	39	575	533.40	R69	7.92	11.91	0.8	153	123	-	205	450	18
101.6	146.1	168.1	54.0	685.8	24	42	635	584.20	R73	9.52	13.49	1.5	184	148	-	255	500	20
114.3	158.8	174.8	63.5	812.8	24	48	749	692.15	R77	11.13	16.66	1.5	270	223	-	388	600	24

Class 600

UNIT : mm

Length Thru Hub			Depth of Socket	Drilling			Dia. of Raised Face for Ring Joint	Pitch Dia. or Ring & Groove	Ring No.	RTJ Type			Approx. Weight(kg)				Nominal Pipe Size	
Slip-on Socket Thread	Lap Joint	Welding Neck		Dia. of Bolt Circle	Number of Bolt	Dia. of Bolt Hole				Depth of Groove	Width of Groove	Radius of Groove	W.N	S.O	S.W	B.L		
T_1	T_2	T	Y	C	N	h	K(min)	P		E	F	r_1					A	B
22.4	22	52.3	9.5	66.5	4	16	51.0	34.14	R11	5.56	7.14	0.8	0.88	0.74	0.78	0.76	15	1/2
25.4	25	57.2	11.1	82.6	4	19	63.5	42.88	R13	6.35	8.74	0.8	1.44	1.24	1.29	1.27	20	3/4
26.9	27	62.0	12.7	88.9	4	19	70.0	50.80	R16	6.35	8.74	0.8	1.81	1.51	1.58	1.59	25	1
28.4	29	66.5	14.3	98.6	4	19	79.5	60.32	R18	6.35	8.74	0.8	2.49	2.03	2.14	2.24	(32)	(1 1/4)
31.8	32	69.9	15.9	114.3	4	22	90.5	68.28	R20	6.35	8.74	0.8	3.55	3.01	3.14	3.30	40	(1 1/4)
36.6	37	73.0	17.5	127.0	8	19	108	82.55	R23	7.92	11.91	0.8	4.34	3.62	3.82	4.11	50	2
41.1	41	79.2	19.0	149.4	8	22	127	101.60	R26	7.92	11.91	0.8	6.41	5.20	5.57	6.20	65	2 1/2
46.0	46	82.6	20.6	168.1	8	22	146	123.82	R31	7.92	11.91	0.8	8.62	7.08	7.59	8.51	80	3
49.3	49	85.9	22.2	184.2	8	26	159	131.78	R34	7.92	11.91	0.8	10.8	8.86	-	10.9	(90)	(3 1/2)
53.8	54	101.6	23.8	215.9	8	26	175	149.22	R37	7.92	11.91	0.8	17.6	14.6	-	17.4	100	4
60.5	60	114.3	23.8	266.9	8	29	210	180.98	R41	7.92	11.91	0.8	29.4	24.6	-	29.4	(125)	(5)
66.5	67	117.3	27.0	292.1	12	29	241	211.12	R45	7.92	11.91	0.8	35.7	29.6	-	36.4	150	6
76.2	76	133.4	31.8	349.3	12	32	302	269.88	R49	7.92	11.91	0.8	54.6	44.0	-	58.8	200	8
85.9	111.3	152.4	33.3	431.8	16	35	356	323.85	R53	7.92	11.91	0.8	90.7	73.3	-	98.4	250	10
91.9	117.3	155.4	39.7	489.0	20	35	413	381.004	R57	7.92	11.91	0.8	110	87.0	-	124	300	12
93.7	127.0	165.1	41.3	527.1	20	39	457	19.10	R61	7.92	11.91	0.8	130	99.8	-	152	350	14
106.4	139.7	177.8	44.5	603.3	20	42	508	469.9	R65	7.92	11.91	0.8	183	142	-	214	400	16
117.3	152.4	184.2	49.2	654.1	20	45	575	533.40	R69	7.92	11.91	0.8	226	176	-	275	450	18
127.0	165.1	190.5	54.0	723.9	24	45	635	584.20	R73	9.52	13.49	1.5	284	224	-	352	500	20
139.7	184.2	203.2	63.5	838.2	24	51	749	692.15	R77	11.13	16.66	1.5	408	317	-	536	600	24

CLASS 900 FLANGES

JIP 7S-15-84 & ANSI B 16.5

WELDING-NECK

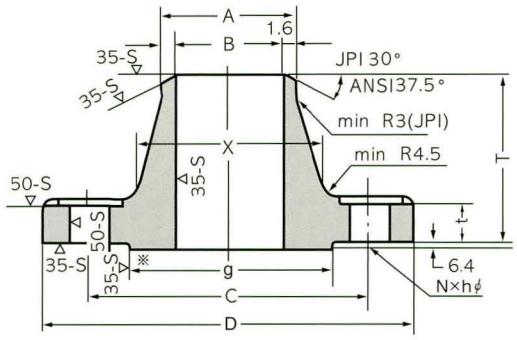

SLIP-ON SOCKET-WELDING

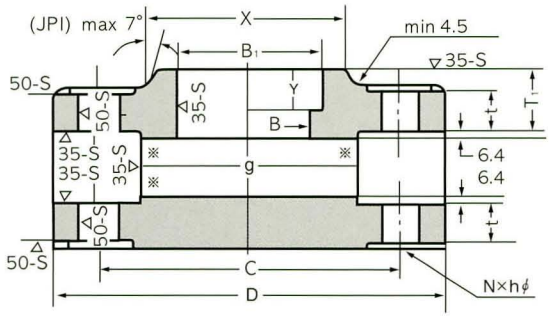

BLIND

Class 900

UNIT : mm

Nominal Pipe Size		Outside Dia. of Flanges	Dia of Bore										Dia. of Hub at Bevel A		Dia. of Hub at Base	Dia. of Raised Face	Thick of Flanges	Radius of Fillet
			Slip-on Socket, B_1		Lap-Joint B_2		Welding-Neck, Socket B											
							JPI			ANSI								
A	B	D	JPI	ANSI	JPI	ANSI	SCH40	SCH80	SCH160	SCH40	SCH80	SCH160	JPI	ANSI	X	g	t	r_2
15	1/2	121	22.2	22.4	–	22.9	16.1	14.3	12.3	15.8	13.9	11.8	21.7	21.3	38.1	34.9	22.4	3
20	3/4	130	27.7	27.7	–	28.2	21.4	19.4	16.2	20.9	18.8	15.6	27.2	26.7	44.5	42.9	25.4	3
25	1	149	34.5	34.5	–	35.1	27.2	25.0	21.2	26.6	24.3	20.7	34.0	33.5	52.3	50.8	28.4	3
(32)	(1 1/4)	159	43.2	43.2	–	43.7	35.5	32.9	29.9	35.1	32.5	29.5	42.7	42.2	63.5	63.5	28.4	5
40	1 1/2	178	49.1	49.5	–	50.0	41.2	38.4	34.4	40.9	38.1	34.0	48.6	48.3	69.9	73.0	31.8	6
50	2	216	61.1	62.0	–	62.5	52.7	49.5	43.1	52.5	49.3	42.9	60.5	60.5	104.6	92.1	38.1	8
65	2 1/2	244	77.1	74.7	–	75.4	65.9	62.3	57.3	62.7	59.0	54.0	76.3	73.2	124.0	104.8	41.1	8
80	3	241	90.0	90.7	–	91.4	78.1	73.9	66.9	77.9	73.7	66.9	89.1	88.9	127.0	127.0	38.1	10
(90)	3 1/2	–	–	–	–	–	90.2	85.4	76.2	90.1	85.5	–	–	–	–	–	–	–
100	4	292	115.4	116.1	–	116.9	102.3	97.1	87.3	102.3	97.2	87.3	114.3	114.3	158.8	157.2	44.5	11
(125)	(5)	349	141.2	143.8	–	144.5	126.6	120.8	108.0	128.2	122.3	109.6	139.8	141.2	190.5	185.7	50.8	11
150	6	381	166.6	170.7	–	171.5	151.0	143.2	128.8	154.1	146.3	131.8	165.2	168.4	235.0	215.9	55.6	13
200	8	470	218.0	221.5	–	222.3	199.9	190.9	170.3	202.7	193.7	173.1	216.3	219.2	298.5	269.9	63.5	13
250	10	546	269.5	276.4	–	277.4	248.8	237.2	210.2	254.5	242.9	215.9	267.4	273.1	368.3	323.8	69.9	13
300	12	610	321.0	327.2	–	328.2	297.9	283.7	251.9	303.2	288.9	257.2	318.5	323.9	419.1	381.0	79.2	13
350	14	641	358.1	358.1	–	360.2	333.4	317.6	284.2	333.3	317.5	284.2	355.6	355.6	450.9	412.8	85.9	13
400	16	705	409.0	409.0	–	411.2	381.0	363.6	325.4	381.0	363.6	325.5	406.4	406.4	508.0	469.9	88.9	13
450	18	787	460.0	460.0	–	462.3	428.6	409.6	366.8	428.7	409.6	366.7	457.2	457.2	565.2	533.4	101.6	13
500	20	857	511.0	511.0	–	514.4	477.8	455.6	408.0	477.8	455.6	408.0	508.0	508.0	622.3	584.2	108.0	13
600	24	1041	613.0	613.0	–	616.0	574.6	547.8	490.6	574.6	547.6	490.6	609.6	609.6	749.3	692.2	139.7	13

THREADED LAP-JOINT

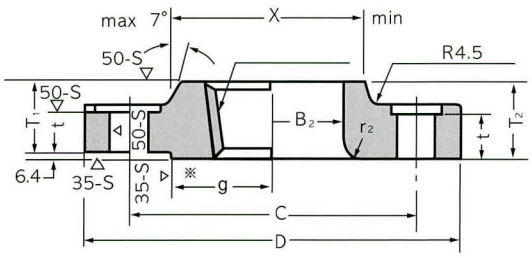

RING-JOINT

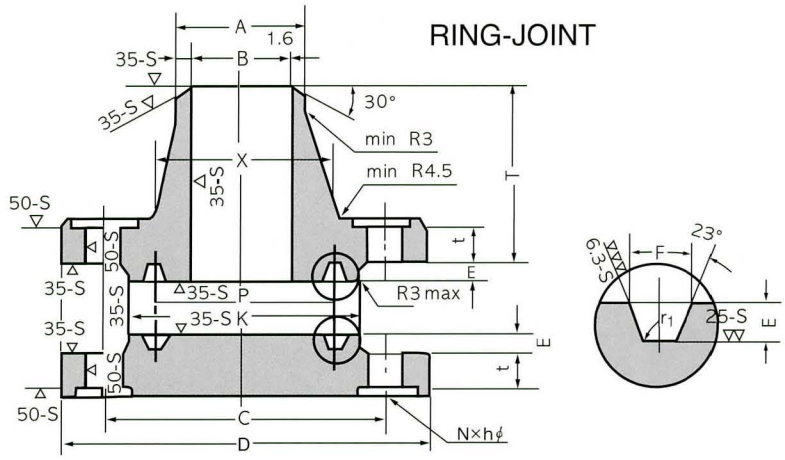

Class 900

UNIT : mm

Length Thru Hub			Depth of Socket	Drilling			Dia. of Raised Face for Ring Joint	Pitch Dia. of Ring & Groove	Ring No.	RTJ Type			Approx. Weight(kg)				Nominal Pipe Size	
Slip-on Socket Thread	Lap Joint	Welding Neck		Dia. of Bolt Circle	Number of Bolt	Dia. of Bolt Hole				Depth of Groove	Width of Groove	Radius of Groove	W.N	S.O	S.W	B.L		
T_1	T_2	T	Y	C	N	h	K(min)	P		E	F	r_1					A	B
31.8	32	60.5	9.5	82.6	4	23	60.5	39.67	R12	6.35	8.74	0.8	1.98	1.76	1.81	1.88	**15**	1/2
35.1	35	69.9	11.1	88.9	4	23	66.5	44.45	R14	6.35	8.74	0.8	2.64	2.32	2.39	2.50	**20**	3/4
41.1	41	73.2	12.7	101.6	4	26	71.5	50.80	R16	6.35	8.74	0.8	3.84	3.44	3.56	3.68	**25**	1
41.1	41	773.2	14.3	111.3	4	26	81.0	60.32	R18	6.35	8.74	0.8	4.47	3.95	4.11	4.19	**(32)**	(11/4)
44.5	44	82.6	15.9	124.0	4	29	92.0	68.28	R20	6.35	8.74	0.8	6.13	5.41	5.61	5.92	**40**	11/2
57.2	57	101.6	17.5	165.1	8	26	124	95.25	R24	7.92	11.91	0.8	11.3	9.92	10.3	10.5	**50**	2
69.9	64	104.6	19	190.5	8	29	137	107.95	R27	7.92	11.91	0.8	15.3	13.5	14.2	14.2	**65**	21/2
53.8	54	101.6	20.6	190.5	8	26	156	123.82	R31	7.92	11.91	0.8	14.2	11.6	-	13.7	**80**	3
-	-	-	-	-	-	-	-	-	-	-	-	-	-	-	-	-	**(90)**	(31/2)
69.9	70	114.3	23.8	235.0	8	32	181	149.2	R37	7.92	11.91	0.8	23.1	19.8	-	22.7	**100**	4
79.2	79	127.0	23.8	279.4	8	35	216	180.98	R41	7.92	11.91	0.8	37.4	32.4	-	37.5	**(125)**	(5)
85.9	86	139.7	27.0	317.5	12	32	241	211.12	R45	7.92	11.91	0.8	49.3	42.1	-	48.7	**150**	6
101.6	114.3	162.1	31.8	393.7	12	39	308	269.88	R49	7.92	11.91	0.8	83.7	71.6	-	84.0	**200**	8
108.0	127.0	184.2	33.3	469.9	16	39	362	323.85	R53	7.92	11.91	0.8	124	102	-	124	**250**	10
117.3	142.7	200.2	39.7	533.4	20	39	419	381.00	R57	7.92	11.91	0.8	168	136	-	176	**300**	12
130.0	155.4	212.9	44.3	558.8	20	42	467	419.10	R62	11.13	16.66	1.5	194	153	-	213	**350**	14
133.4	165.1	215.9	44.5	616.0	20	45	524	469.90	R66	11.13	16.66	1.5	239	186	-	269	**400**	16
152.4	190.5	228.6	49.2	685.8	20	51	594	533.40	R70	12.70	19.84	1.5	326	258	-	382	**450**	18
158.8	209.6	247.7	54.0	749.3	20	54	648	584.20	R74	12.70	19.84	1.5	410	317	-	481	**500**	20
203.2	266.7	292.1	63.5	901.7	20	67	772	692.15	R78	15.58	26.97	2.4	758	608	-	914	**600**	24

CLASS 1500–2500 FLANGES

JIP 7S-15-84 & ANSI B 16.5

WELDING-NECK

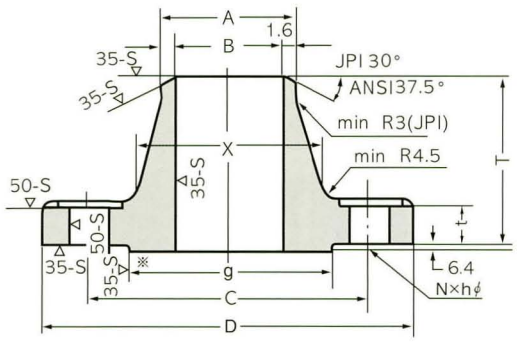

SLIP-ON • SOCKET-WELDING

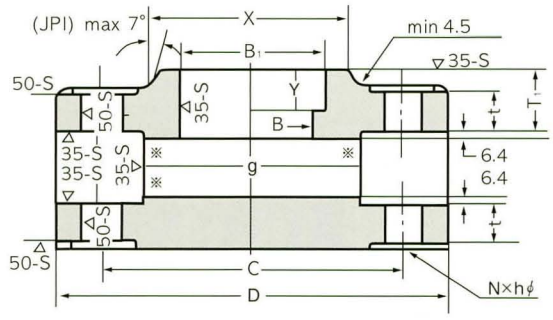

BLIND

Class 1500

UNIT : mm

Nominal Pipe Size		Outside Dia. of Flanges	Dia of Bore										Dia. of Hub at Bevel A		Dia. of Hub at Base	Dia. of Raised Face	Thick of Flanges	Radius of Fillet
			Slip-on Socket, B_1		Lap-Joint B_2		Welding-Neck, Socket B											
							JPI			ANSI								
A	B	D	JPI	ANSI	JPI	ANSI	SCH40	SCH80	SCH160	SCH40	SCH80	SCH160	JPI	ANSI	X	g	t	r_2
15	1/2	121	22.2	22.4	-	22.9	16.1	14.3	12.3	15.8	13.9	11.8	21.7	21.3	38.1	34.9	22.4	3
20	3/4	130	27.7	27.7	-	28.2	21.4	19.4	16.2	20.9	18.8	15.6	27.2	26.7	44.5	42.9	25.4	3
25	1	149	34.5	34.5	-	35.1	27.2	25.0	21.2	26.6	24.3	20.7	34.0	33.5	52.3	50.8	28.6	3
(32)	(1 1/4)	159	43.2	43.2	-	43.7	35.5	32.9	29.9	35.1	32.5	29.5	42.7	42.2	63.5	63.5	28.6	5
40	1 1/2	178	49.1	49.5	-	50.0	41.2	38.4	34.4	40.9	38.1	34.0	48.6	48.3	69.9	73.0	31.8	6
50	2	216	61.1	62.0	-	62.5	52.7	49.5	43.1	52.5	49.3	42.8	60.5	60.5	104.6	92.1	38.1	8
65	2 1/2	244	77.1	74.7	-	75.4	65.9	62.3	57.3	62.7	59.0	54.0	76.3	73.2	124.0	104.8	41.3	8
80	3	267	90.0	90.7	-	91.4	78.1	73.9	66.9	77.9	73.7	66.7	89.1	88.91	133.4	127.0	47.8	10
(90)	(3 1/2)	-	102.6	103.4	-	-	90.2	85.4	76.2	90.1	85.5	-	-	-	-	-	-	-
100	4	311	115.4	116.1	-	116.9	102.3	97.1	87.3	102.3	97.2	87.3	114.3	114.3	162.1	157.2	54.0	11
(125)	(5)	375	141.2	143.8	-	144.5	126.6	120.8	108.0	128.2	122.3	109.6	139.8	141.2	196.9	185.7	73.2	11
150	6	394	166.6	170.7	-	171.5	151.0	143.2	128.8	154.1	146.3	131.8	165.2	168.4	228.6	215.9	82.6	13
200	8	483	218.0	221.5	-	222.3	199.9	190.9	170.3	202.7	193.7	173.1	216.3	219.2	292.1	269.9	92.1	13
250	10	584	269.5	276.4	-	277.4	248.8	237.2	210.2	254.5	242.9	215.9	267.4	273.1	368.3	323.8	108.0	13
300	12	673	321.0	327.2	-	328.2	297.9	283.7	251.9	303.2	288.9	257.2	318.5	323.9	450.9	381.0	124.0	13
350	14	749	358.1	358.1	-	360.2	333.4	317.6	284.2	333.3	317.5	284.2	355.6	355.6	495.6	412.8	133.4	13
400	16	826	409.0	409.0	-	411.2	381.0	363.6	325.4	381.0	363.6	325.5	406.4	406.4	552.5	469.9	146.1	13
450	18	914	460.0	460.0	-	462.3	428.6	409.6	366.8	428.7	409.6	366.7	457.2	457.2	596.9	533.4	162.1	13
500	20	984	511.0	511.0	-	514.4	477.8	455.6	408.0	477.8	455.6	408.0	508.0	508.0	641.4	584.2	177.8	13
600	24	1168	613.0	613.0	-	616.0	574.6	547.8	490.6	574.6	547.7	490.5	609.6	609.6	762.0	692.2	203.2	13

Class 2500

UNIT : mm

Nominal Pipe Size		Outside Dia. of Flanges	Dia of Bore										Dia. of Hub at Bevel A		Dia. of Hub at Base	Dia. of Raised Face	Thick of Flanges	Radius of Fillet
			Slip-on Socket, B_1		Lap-Joint B_2		Welding-Neck, Socket B											
							JPI			ANSI								
A	B	D	JPI	ANSI	JPI	ANSI	SCH40	SCH80	SCH160	SCH40	SCH80	SCH160	JPI	ANSI	X	g	t	r_2
15	1/2	133	22.2	22.4	-	22.9	16.1	14.3	12.3	15.8	13.9	11.8	21.7	21.3	42.9	34.9	30.2	3
20	3/4	140	27.7	27.7	-	28.2	21.4	19.4	16.2	20.9	18.8	15.6	27.2	26.7	50.8	42.9	31.8	3
25	1	159	34.5	34.5	-	35.1	27.2	25.0	21.2	26.6	24.3	20.7	34.0	33.5	57.2	50.8	35.1	3
(32)	(1 1/4)	184	43.2	43.2	-	43.7	35.3	32.9	29.9	35.1	32.5	29.5	42.7	42.2	73.2	63.5	38.1	5
40	1 1/2	203	49.1	49.5	-	50.0	41.2	38.4	34.4	40.9	38.1	34.0	48.6	48.3	79.2	73.0	44.5	6
50	2	235	61.1	62.0	-	62.5	52.7	49.5	43.1	52.5	49.3	42.9	60.5	60.5	95.3	92.1	50.8	8
65	2 1/2	267	77.1	74.7	-	75.4	65.9	62.3	57.3	62.7	59.0	54.0	76.3	73.2	114.3	104.8	57.2	8
80	3	305	90.0	90.7	-	91.4	78.1	73.9	66.9	77.9	73.7	66.9	89.1	88.9	133.4	127.0	66.5	10
(90)	(3 1/2)	-	-	-	-		90.2	85.4	76.2	90.1	85.5	-	-	-	-	-	-	-
100	4	356	115.4	116.1	-	116.9	102.3	97.1	87.3	102.3	97.2	87.3	114.3	114.3	165.1	157.2	76.8	11
(125)	(5)	419	141.2	143.8	-	144.5	126.6	120.8	108.0	128.2	122.3	109.6	139.8	141.2	203.2	185.7	91.5	11
150	6	483	166.6	170.7	-	171.5	151.0	143.2	128.8	154.1	146.3	131.8	165.2	168.4	235.0	215.9	108.0	13
200	8	552	218.0	221.5	-	222.3	199.9	190.9	170.3	202.7	193.7	173.1	216.3	219.2	304.8	269.9	127.0	13
250	10	673	269.5	276.4	-	277.4	248.8	237.2	210.2	254.5	242.9	215.9	267.4	273.1	374.7	323.8	165.1	13
300	12	762	321.0	327.2	-	328.2	297.9	283.7	251.9	303.2	288.9	257.2	318.5	323.9	441.5	381.0	184.2	13

THREADED LAP-JOINT

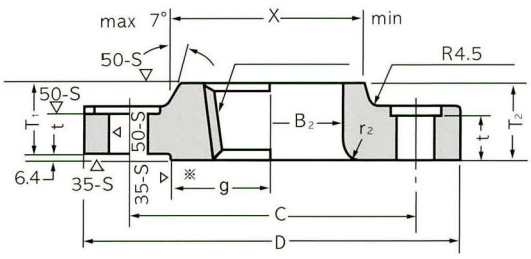

RING-JOINT

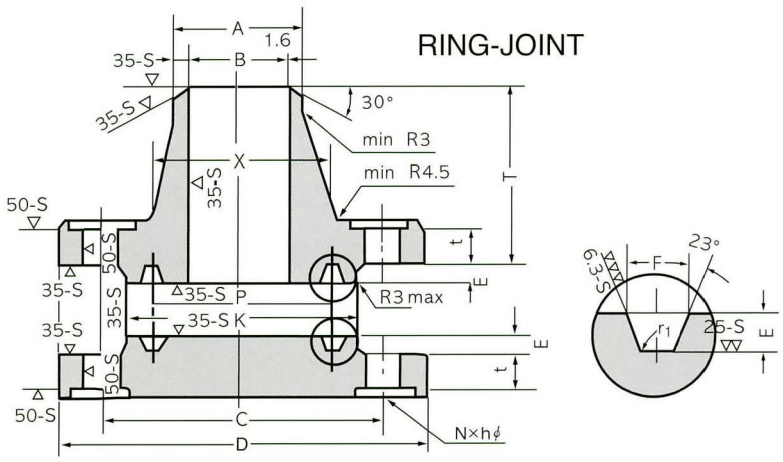

Class 1500

UNIT : mm

Length Thru Hub			Depth of Socket	Drilling			Dia. of Raised Face for Ring Joint	Pitch Dia. of Ring & Groove	Ring No.	RTJ Type			Approx. Weight(kg)				Nominal Pipe Size	
Slip-on Socket Thread	Lap Joint	Welding Neck		Dia. of Bolt Circle	Number of Bolt	Dia. of Bolt Hole				Depth of Groove	Width of Groove	Radius of Groove	W.N	S.O	S.W	B.L		
T_1	T_2	T	Y	C	N	h	K(min)	P		E	F	r_1					A	B
31.8	31.8	60.5	9.5	82.6	4	23	60.5	39.67	R12	6.35	8.74	0.8	1.98	1.76	1.81	1.88	615	1/2
35.1	35.1	69.9	11.1	88.9	4	23	66.5	44.45	R14	6.35	8.74	0.8	2.64	2.32	2.39	2.50	20	3/4
41.1	41.1	73.2	12.7	101.6	4	26	71.5	50.80	R16	6.35	8.74	0.8	3.84	3.44	3.56	3.68	25	1
41.1	41.1	73.2	14.3	111.3	4	26	81.0	60.32	R18	6.35	8.74	0.8	4.47	3.95	4.11	4.29	(32)	(1 1/4)
44.5	44.5	82.6	15.9	124.0	4	29	92.0	68.28	R20	6.35	8.74	0.8	6.13	5.41	5.61	5.92	4	1 1/2
57.2	57.2	101.6	17.5	165.1	8	26	124	95.25	R24	7.92	11.91	0.8	11.3	9.92	10.3	10.5	50	2
63.5	63.5	104.6	19.0	190.5	8	29	137	107.95	R27	7.92	11.91	0.8	15.3	13.5	14.2	14.4	65	2 1/2
73.2	73.2	117.3	20.6	203.2	8	32	168	136.52	R35	7.92	11.91	0.8	20.7	18.1	-	20.0	80	3
-	-	-	-	-	-	-	-	-	-	-	-	-	-	-	-	-	(90)	(3 1/2)
90.4	90.4	124.0	23.8	241.3	8	35	194	161.92	R39	7.92	11.91	0.8	30.8	27.8	-	30.8	100	4
104.6	104.6	155.4	27.8	292.1	8	42	229	193.68	R44	7.92	11.91	0.8	58.6	52.6	-	60.0	(125)	(5)
119.1	119.1	171.5	27.0	317.5	12	39	248	211.12	R46	9.52	13.49	1.5	70.7	62.1	-	73.7	150	6
142.7	142.7	212.9	31.8	393.7	12	45	318	269.88	R50	11.13	16.66	1.5	121	105	-	125	200	8
158.8	177.8	254.0	33.3	482.6	12	51	371	323.85	R54	11.13	16.66	1.5	211	180	-	216	250	10
180.8	218.9	282.4	39.7	571.5	16	54	438	381.00	R58	14.27	23.01	1.5	318	271	-	330	300	12
-	241.3	298.5	41.3	635.0	16	61	489	419.10	R63	15.88	26.97	2.4	415	-	-	437	350	14
-	260.4	311.2	44.5	704.9	16	67	546	469.90	R67	17.48	30.18	2.4	535	-	-	582	400	16
-	276.4	327.2	49.2	774.7	16	74	613	533.40	R71	17.48	30.18	2.4	702	-	-	769	450	18
-	292.1	355.6	54.0	831.9	16	80	673	584.20	R75	17.48	33.32	2.4	871	-	-	1001	500	20
-	330.2	406.4	63.5	990.6	16	93	794	692.15	R79	20.62	36.53	2.4	1405	-	-	1628	600	24

Class 2500

UNIT : mm

Length Thru Hub			Depth of Socket	Drilling			Dia. of Raised Face for Ring Joint	Pitch Dia. or Ring & Groove	Ring No.	RTJ Type			Approx. Weight(kg)				Nominal Pipe Size	
Slip-on Socket Thread	Lap Joint	Welding Neck		Dia. of Bolt Circle	Number of Bolt	Dia. of Bolt Hole				Depth of Groove	Width of Groove	Radius of Groove	W.N	S.O	S.W	B.L		
T_1	T_2	T	Y	C	N	h	K(min)	P		E	F	r_1					A	B
39.6	39.6	73.2	9.5	88.9	4	23	65.0	42.88	R13	6.35	8.74	0.8	3.28	3.2	-	3.09	15	1/2
42.9	42.9	79.2	11.1	95.3	4	23	73.0	50.80	R16	6.35	8.74	0.8	3.86	3.6	-	3.66	20	3/4
47.8	47.8	88.9	12.7	108.0	4	26	82.5	60.32	R18	6.35	8.74	0.8	5.40	5.0	-	5.14	25	1
52.3	52.3	95.3	14.3	130.0	4	29	102	72.24	R21	7.92	11.91	0.8	8.13	7.3	-	7.74	(32)	(1 1/4)
60.5	60.5	111.3	15.9	146.1	4	32	114	82.55	R23	7.92	11.91	0.8	6.13	11.3	-	10.8	40	1 1/2
69.9	69.9	127.0	17.5	171.5	8	29	133	101.60	R26	7.92	11.91	0.8	16.7	17.2	-	16.1	50	2
79.2	79.2	142.7	19.0	196.9	8	32	149	112.12	R28	9.52	13.49	1.5	24.5	24.9	-	23.7	65	2 1/2
91.9	92.9	168.1	20.6	228.6	8	35	168	127.00	R32	9.52	13.49	1.5	37.4	37.6	-	36.0	85	3
-	-	-	-	-	-	-	-	-	-	-	-	-	-	-	-	-	(90)	(3 1/2)
108	108	190.5	23.8	273.1	8	42	203	157.18	R38	11.13	16.66	1.5	57.3	56.7	-	55.9	100	4
130	130	228.6	23.8	323.9	8	48	241	190.50	R42	12.70	19.84	1.5	96.1	95.3	-	94.1	(125)	(5)
152.4	152.4	273.1	27.0	368.3	8	54	279	228.60	R47	12.70	19.84	1.5	149	147.4	-	146	150	6
177.8	179.8	317.5	31.8	438.2	12	54	340	279.40	R51	14.27	23.01	1.5	222	220.0	-	220	200	8
228.6	228.6	419.1	33.3	540.0	12	67	425	342.90	R55	17.48	30.18	2.4	434	421.8	-	429	250	10
254.0	254.0	463.6	39.7	619.3	12	74	495	404.40	R60	17.48	33.32	2.4	610	499.0	-	609	300	12